MOUNTAIN SPARK GAPS

NPARC—The Radio Club for the Watchung Mountain Area

Website: http://www.nparc.org
Club Calls: N2XJ, W2FMI
Facebook: New Providence Amateur Radio Club ((NPARC)

VOLUME 51 NO.3 March 2016

UPCOMING EVENTS

Regular Meetings

4/11 & 4/25
Monday 7:30
NP Community Center

It is not too early to start thinking
About Field Day.
6/25 and 6/26.
In particular, any ideas about antenna
anchors in place of the trees along
the fence line will be welcome.

Meeting Schedule

Regular Meeting: 7:30—9:00 PM
2nd Monday of each month at the
NP Senior & Adult Center
15 East Forth Street
New Providence

Informal Project Meeting: 7:30—9:00 PM
4th Monday of each month
Same location
Everyone is Welcome
If a normal meeting night is a holiday, we usually meet the following night.
Call one of the contacts below or check the web site

Club Officers for 2015

President: KC2WUF David Bean
973-747-6116
Vice President:K2UI Jim Stekas
973-377-4180
Secretary: KD2EKN Tim Farrell
908-244-6202
Treasurer: K2YG Dave Barr
908-277-4283
Activities: W2PTP Paul Wolfmeyer
201-404-6914

On the Air Activities

Club Operating Frequency
145.750 MHz FM Simplex

Sunday Night Phone Net
Murray Hill Repeater (W2LI) at 9:00 PM
Transmit on 147.855 MHz
With PL tone of 141.3 Hz
Receive on 147.255 MHz
Net Control K2AL

Digital Net
First & Third Mondays 9 PM
Details as announced.

Club Internet Address

Website:http://www.nparc.org
Webmaster K2MUN David Berkley
Reflector: nparc@mailman.qth.net
Contact K2UI, Jim

MOUNTAIN SPARK GAPS

Published Monthly by NPARC, Inc.
The Watchung Mountain Area Radio Club
P.O. Box 813
New Providence, NJ 07974

Editor: K2EZR Frank McAneny
Contributing Editors:
WB2QOQ Rick Anderson
WB2EDO Jim Brown
K2UI Jim Stekas

Climatological Data for New Providence for February 2016

The following information is provided by Rick, WB2QOQ, who has been recording daily weather events at his station for the past 34 years.

TEMPERATURE -

Maximum temperature this February, 62 deg. F (February 24)
Last February(2015) maximum was 46 deg. F.
Average Maximum temperature this February, 44.1 deg. F
Minimum temperature for this February, -2 deg. F (February 14)
Last February(2015) minimum was -3 deg. F.
Average Minimum temperature this February, 25.5 deg. F
Minimum diurnal temperature range, 8 deg. (39-31 deg.) 2/23
Maximum diurnal temperature range, 28 deg. (62-34 deg.) 2/24

Average temperature this February, 34.8 deg. F
Average temperature last February, 21.1 deg. F

PRECIPITATION -

Total precipitation this February - 6.75" snow; 5.51" rain/melted snow.
Total precipitation last February - 30.5" snow; 5.59" rain/melted snow.

Maximum one day precip. event this February -
February 5, 5.0" snow; Feb. 24, 2.1" rain.
Measurable rain fell on 9 days this February, 2 days last February.
Measurable snow fell on 4 days this February.

==========

Rick Anderson
3/14/16
243 Mountain Ave.
New Providence, NJ
(908)464-8912
rick243@comcast.net

Lat = 40 degrees, 41.7 minutes North
Long = 74 degrees, 23.4 minutes West
Elevation: 380 ft.

Miscellaneous

March 14

March 14th ie the time to celebrate the mathematical constant Pi! For whatever reason I was inspired to bake a pie from scratch.. So what better day than Pi day? As I have been recently working with the single board Linux computer "Raspberry Pi", why not make a raspberry pie? Attached is my latest fresh baked raspberry pie next to a freshly installed Raspberry Pi.

James KB2FCV

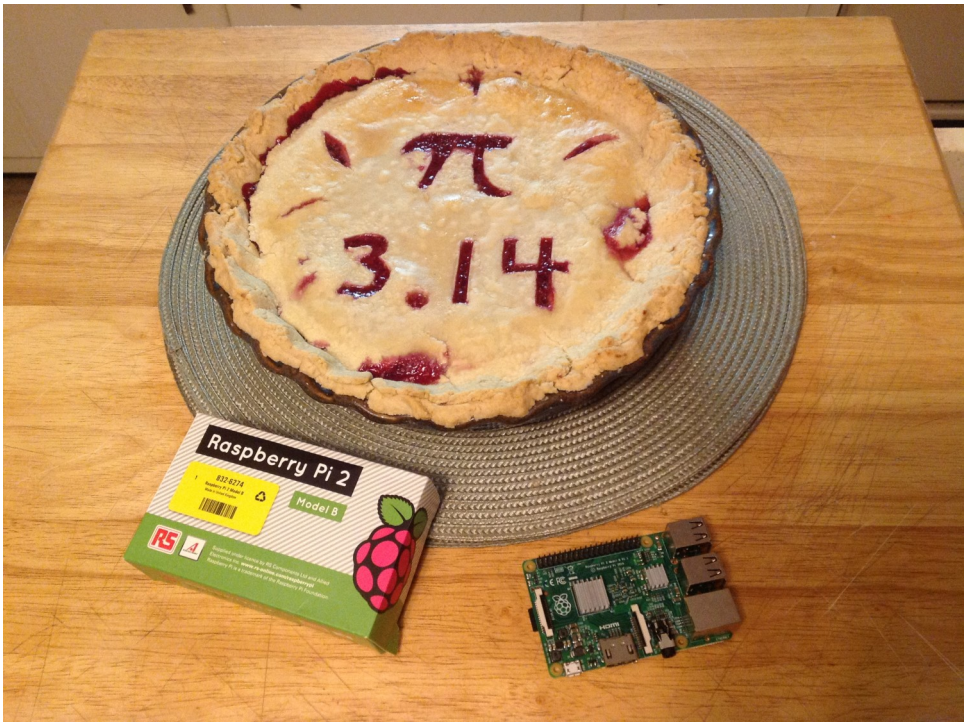

Thanks, James

Auction Pictures

Good Stuff

Auctioneer– Looking for a better bid?

Food Table. Vendors or Consumers?

More Good Stuff

Club Donations.

Thanks to Jon, AE2JP for the photos.

What's Old is New Again

Jim Stekas - K2UI

Superheterodyne receivers began finding their way into the ham shack in the 1920's. The performance improvement over regenerative receivers provided the extra oomph needed to support reliable trans-Atlantic QSOs. Since the 1930's, the superheterodyne receiver architecture (below) has been dominant in the ham shack and pretty much everywhere else.

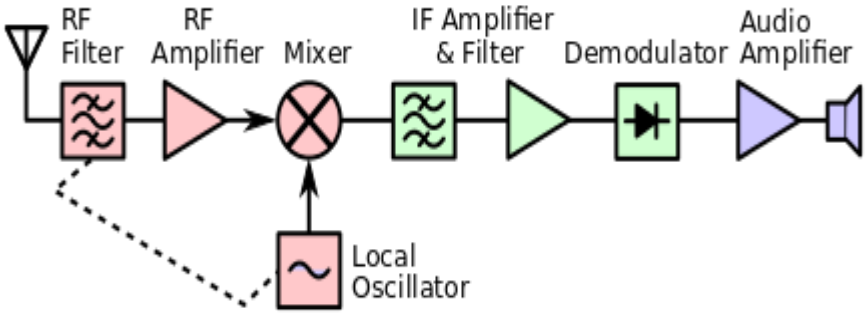

Over time the superhet was improved with the addition of crystal and mechanical filters, multiple IF stages (dual and triple conversion), double balanced mixers, DSP, etc. The Hiberling PT-8000A transceiver sits at #4 on Sherwood's table thanks to its no compromise design and 13 crystal filters in its main receiver. The price is about the same as a Kia Forte (which has gas and oil filters.)

In 1968, QST published an article titled “Direct Conversion – A Neglected Technique” by Wes Hayward (W7ZOI) and Dick Bingham (W7WKR). It described a very simple 4 transistor direct conversion receiver (DCR) that delivered impressive performance. A DCR can be viewed as a superhet with an IF frequency of 0Hz, essentially a product detector operating at the received frequency. All filtering and amplification occurs at audio frequencies.

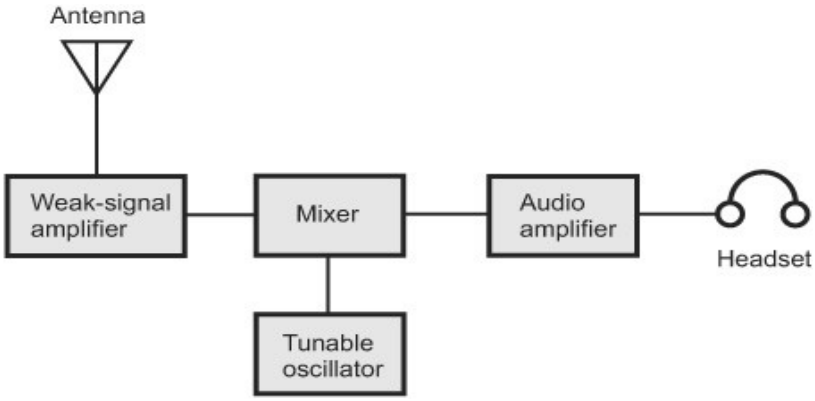

Since the IF is 0Hz, the local oscillator (LO) operates on the receive frequency, a nice feature for a transceiver since it allows the LO to do double duty as a VFO on transmit. In 1970, Doug DeMaw (W1CER/W1FB) described a dual band 80/40m CW transceiver based on this principle. DeMaw and Hayward sparked interest in QRP and supported its growth with many QST articles and ARRL publications throughout the 1970s. These described solid state QRP construction projects that that were cheap and simple to build and lent themselves to battery powered portable operation. The increasing interest in QRP got the attention of commercial manufacturers. Ten-Tec broke on the scene with the Powermite transceiver, and Heathkit followed shortly after with the HW-7. Both contained a DCR and made the LO do double duty as a VFO on transmit. Provision was made for Novice class licensees to use xtal control on transmit until their General ticket arrived in the mail and they could switch to the VFO.

Direct conversion receivers are not without their problems.

First off, all the gain (~100dB) is at audio frequencies, so feedback is real design challenge.

Any LO signal leaking into the mixer input will be converted to D.C. and fed into the amplifier. Getting 100dB of LO isolation from the mixer input is unfeasible, so the amplifier must have a very deep notch at DC. Typically the AF filter/amp has a corner frequency of 200-300 Hz.

For a 0Hz IF, the image and received frequencies are the same. The result is that signals and noise from both sides of the center frequency will be received simultaneously, doubling the noise and interference. A 3kHz filter will pass 6kHz of the radio spectrum.

Most DCRs are designed to be cheap and portable, and little effort is expended in making them better than just good enough. Rick Campbell (KK7B) took it upon himself to create high performance DCR. His efforts resulted in the R2 (below, from QST Jan 1993) a single signal receiver that uses phasing to cancel out the unwanted sideband. The R2 specs are "high" dynamic range, "moderate" noise figure, "low" distortion and 60dB of output SNR. It's been described as being Drake 2B-like with outstanding audio.

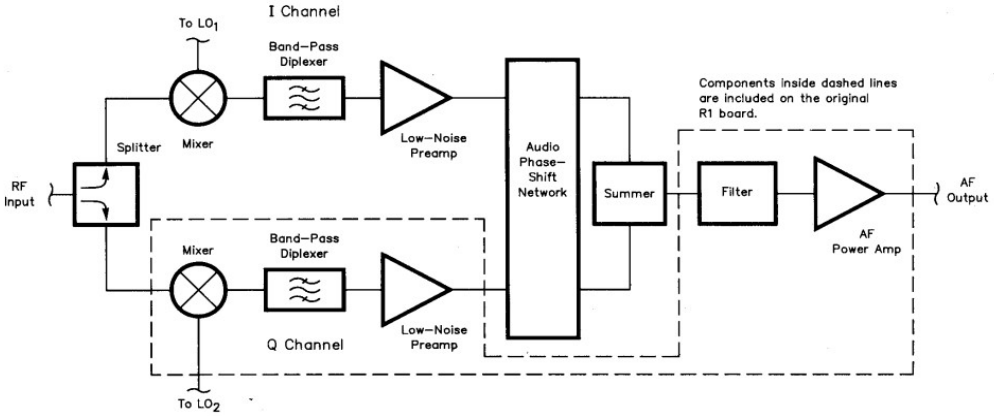

Replacing the audio circuitry with DSP turns Cambell's R2 design into an SDR (below). Today there are many small/cheap single-board SDRs that conform the block diagram.

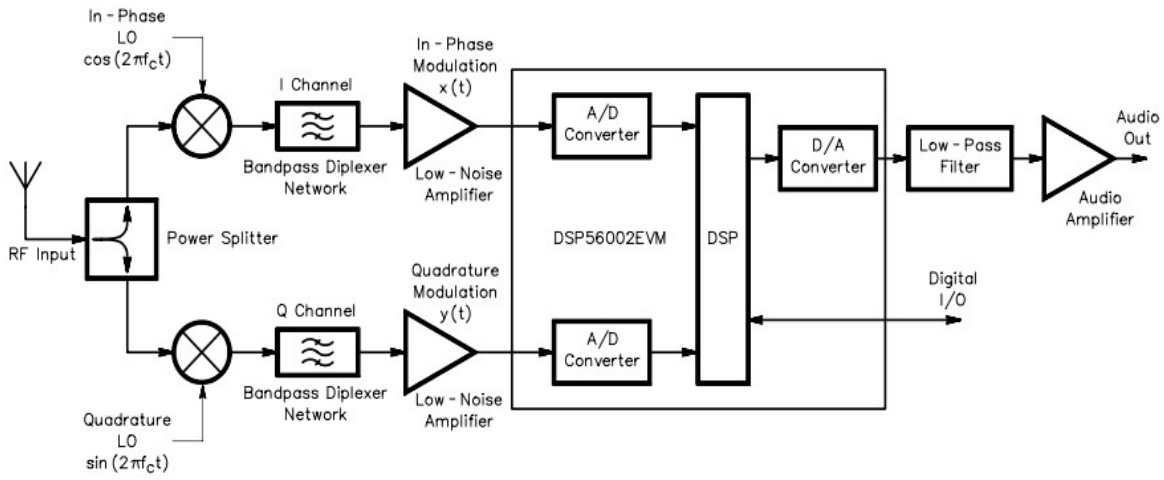

In the 1970s and 80s, DCRs found their way into the portable rigs of ham hikers and campers. In the 1990s the market for cheap, portable, low power radios exploded from 1000s of hams to millions of cellphone users. The same feature that make the DCR attractive to a backpacking ham make it attractive as a cellphone receiver. To meet the need, chip designers integrated more and more radio blocks onto a single chip. Today every smartphone is a PDA with an ASIC "radio-on-a-chip" with a DCR as its front end.

Below is a block diagram of the Analog Devices AD9364, a transceiver on a chip utilizing direct conversion. It has analog inputs/outputs for Rx/Tx antennas and outputs/inputs digital I/Q. Frequency coverage is from 70MHz to 6GHz tunable in 2.4Hz steps via on-board PLL. ADC/DAC sample rates are also programmable allowing for digital I/Q bandwidths from 200kHz to 56MHz. Each I/Q stream passes through a 128-tap FIR filters with programmable coefficients. This chip (or its big brother) is at the heart of many (most?!) of the GNU Radio SDR platforms.

(For example https://www.ettus.com/product/category/USRP-Bus-Series)

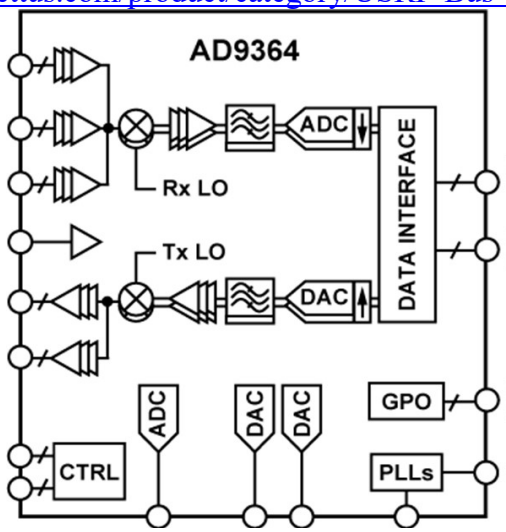

SCIENTIFIC TIDBITS
Jim WB2EDO

.

An Ocean on Saturn's Moon

One of Saturn's 62 moons may have a massive ocean sloshing around below its icy surface. Poring over more than seven years of images captured by NASA's Cassini space probe, astronomers detected a slight but distinct wobble in the moon Enceladus. The discovery rules out the possibility that the moon's crust is frozen to a core of solid rock. If the surface and core were rigidly connected, the core would provide so much dead weight, the wobble would be far smaller. This proves that there must be a global layer of liquid separating the surface from the core. The new findings suggest that geysers of water vapor, first observed on Enceladus surface by NASA's Cassini spacecraft a decade ago, are being fed by this vast liquid reservoir and that the moon is much warmer than previously thought. These conditions hint that Enceladus could contain environments suitable for living organisms. The more we discover about the other celestial bodies, the more we realize that "we ain't alone in our universe."

Alaska's Lost World of Dinosaurs

Dinosaurs are commonly thought to have lived in temperate and tropical climates, thundering through forest and jungles or over grassy plains. But paleontologists now believe a plant-eating, duck-billed giant roamed the frigid landscape of northern Alaska about 70 million years ago. After analyzing thousands of dinosaur bones discovered around the Prince Creek Geological formation along Alaska's Colville River, researchers have identified a distinct species of hadrosaur, called Ugrunaaluk Kuukpikensis, or "ancient grazer." These creatures could move around on all fours but primarily walked on their hind legs, and they had hundreds of teeth, which helped them gnaw coarse vegetation. Most of the recovered Ugrunaaluk skeletons were from young dinosaurs, suggesting the herd was suddenly wiped out.

. Scientists are amazed that dinosaurs lived in that environment. The climate in northern Alaska was more forgiving in the Late Cretaceous period than it is today, with average temperatures in the low 40s. Still, the dinosaurs would have endured long, snowy winter months of Arctic darkness. The finding of dinosaurs this far north challenges everything that was previously thought regarding a dinosaur's physiology. It creates this natural question: How did they survive up there?

More on Dinosaurs

For decades, paleontologists have split over two competing theories behand the demise of dinosaurs 66 million years ago. Some argue the culprit was a major asteroid impact; others blame a massive series of volcanic eruptions. Now a new study suggests both catastrophes were responsible. Using the most precise available dating techniques, researchers analyzed rock samples from the Deccan Traps, a 200,000-square mile geological formation in western India. Their findings reveal that volcanic eruptions at the site accelerated around the same time an asteroid struck, at the end of the Cretaceous period. It was probably no coincidence. The seismic shock from the asteroid impact intensified the volcanic activity, blanketing the Earth with a noxious brew of dust and toxic fumes. That suggest a one-two punch triggered the mass extinction that began 50,000 years later, claiming the dinosaurs as part of the die-off of 70 percent of the world's plants and animals. Both phenomena were clearly at work at the same time. The scenario that is being suggested is that the impact triggered the volcanism and does in fact reconcile what had previously appeared to be an unimaginable coincidence.

Jim WB2EDO