MOUNTAIN SPARK GAPS

NPARC—The Radio Club for the Watchung Mountain Area

Website: http://www.nparc.org
Club Calls: N2XJ, W2FMI
Facebook: New Providence Amateur Radio Club ((NPARC)

VOLUME 53 NO. 7 July 2018

Regular Meetings

8/13 & 8/27
Monday 7:30
DeCorso Community Center

Upcoming Events

Holiday Luncheon
12/10 Chimney Rock

Kids Day

Meeting Schedule

Regular Meeting: 7:30—9:00 PM
2nd Monday of each month at the
NP Senior & Adult Center
15 East Forth Street
New Providence

Informal Meeting: 7:30—9:00 PM
4th Monday of each month
Same location
Everyone is Welcome
If a normal meeting night is a holiday, we usually meet the following night.
Call one of the contacts below or check the web site

Club Officers for 2018

President: W2PTP Paul Wolfmeyer
201-406-6914
Vice President:K2GLS Bob Willis
973-543-2454
Secretary: K2AL: Al Hanzl
908-872-5021
Treasurer: K2YG Dave Barr
908-277-4283
Activities: KA2MPG Brian Lynch
973-738-7322

On the Air Activities

Club Operating Frequency
145.750 MHz FM Simplex

Sunday Night Phone Net
Murray Hill Repeater (W2LI) at 9:00 PM
Transmit on 147.855 MHz
With PL tone of 141.3 Hz
Receive on 147.255 MHz
Net Control K2AL

Digital Net
First & Third Mondays 9 PM
28,084 — 28,086
Will be using PSK and RTTY
Net control K2YG

Club Internet Address

Website: http://www.nparc.org
Webmaster KC2WUF David Bean
Reflector: nparc@mailman.qth.net
Contact K2UI, Jim

MOUNTAIN SPARK GAPS

Published Monthly by NPARC, Inc.
The Watchung Mountain Area Radio Club
P.O. Box 813
New Providence, NJ 07974

Editor: K2EZR Frank McAneny
Contributing Editors:
WB2QOQ Rick Anderson
W2PTP Paul Wolfmeyer
K2UI Jim Stekas

Climatological Data for New Providence for June 2018

The following information is provided by Rick, WB2QOQ, who has been recording daily weather events at his station for the past 36 years.

TEMPERATURE -
Maximum temperature this June, 95 deg. F (June 30)
Last June(2017) maximum was 95 deg. F.
Average Maximum temperature this June, 86.8 deg. F
Minimum temperature this June, 52 deg. F (June 3, 12)
Last June(2017) minimum was 49 deg. F.
Average Minimum temperature this June, 62.6 deg. F
Minimum diurnal temperature range, 6 deg. (69 - 63 deg.)6/23
Maximum diurnal temperature range, 30 deg. (85 - 65 deg.) 6/9

Average temperature this June, 74.7 deg. F
Average temperature last June, 70.9 deg. F

PRECIPITATION -
Total precipitation this June - 2.20" rain
Total precipitation last June - 3.25" rain

Maximum one day precip. event this June -

June 3, 0.44" rain
Measurable rain fell on 16 days this June, 13 days last June.

YTD Precipitation - 25.19"

==========
Rick Anderson
7/7/18
243 Mountain Ave.
New Providence, NJ
(908)464-8912
rick243@comcast.net
Lat = 40 degrees, 41.7 minutes North
Long = 74 degrees, 23.4 minutes West
Elevation: 380 ft.
CoCoRaHS Network Station #NJ-UN-10

President's Column July 2018

I hope your summer is going well…
Last meeting I reviewed the Hudson Division Cabinet Meeting, in which there was a fair amount of discussion about developing hams. We have over 750 thousand hams in the US and over half of those are technician class. So there is a real opportunity for us to be good "Elmers" and mentor/expose technicians and new hams to the many facets of ham radio. Field Day at NPARC has encouraged a number of new hams to actually Get-On-the-Air (and that alone is a reward for the work of Field Day!).
But we need to do more--On reflection, I personally need to do more encouragement and mentoring of new hams and potential hams. I pledge to do that! How about you?
Recently, while taking my ten year old grandson to Choir rehearsal, I asked about his interest in science and physics and electricity…he is interested….I had heard about Snap Circuits from a QST review…so we gave him a kit for his birthday…he's "nuts" about it…maybe it will lead to another ham…
So the opportunities are around us…

73 for now
Wolf
W2PTP
201-404-6914 or W2PTP@arrl.net

Field Day 2018 Thanks to AE2JP

Saturday Lunch

Enjoying Same

Station 2 Setup

Station 1

UHF Station

The Sabertooth Dipole

Jim Stekas - K2UI

Long before the ARRL Antenna book existed the general rule for building a good antenna was to “get as much wire as possible as high as possible.” That's still pretty good advice.

Few hams have the real estate to put up a full size antenna for 160m. For most of us even a full size 80m dipole is a significant challenge. Adding loading coils to a short dipole is a common solution for the real-estate challenged. Another alternative is a “drooping dipole” which is a full length half-wave dipole with the center as high as possible and the ends allowed to dangle vertically. For unfortunate hams living in new developments with antenna restrictions the best option may be an attic antenna where a half-wave dipole is made to fit in the attic by zig-zagging it around.

In the current issue of CQ magazine is a description by KB1EHE of “The Sabertooth Wire: An Innovation in Antenna Shortening”. Sabertooth Wire (SW) is ordinary wire that comes in an already zig-zagged form enclosed in shrink tubing (see below).

Sawtooth Wire

A wave propagating down a length of bare copper wire travels at the speed of light, C. Because a physical length L of SW wire contains 3xL of copper wire, the electrical length of the SW is 3X the physical length. A half-wave dipole on 80m would only require about 44ft of SW as compared to 132ft for normal copper wire. That's even shorter than standard 40m dipole!

But how will it compare to a full size dipole? Let's have a look ….

As far as radiation pattern, there will be hardly any difference between a half-wave dipole and something 1/3 the size. All small linear and loop antennas have an axis along which they do not radiate, so they have the same donut shaped radiation pattern as a half-wave dipole.

First off, what makes an antenna radiate is length and current. Double the current in an antenna and you double the strength of the radiated E&M field. Since $P \propto RI^2$, doubling the current will also quadruple the radiated power.

Now let's compare the currents in a full size half-wave dipole with an SW half-wave dipole when they are fed by identical current sources.

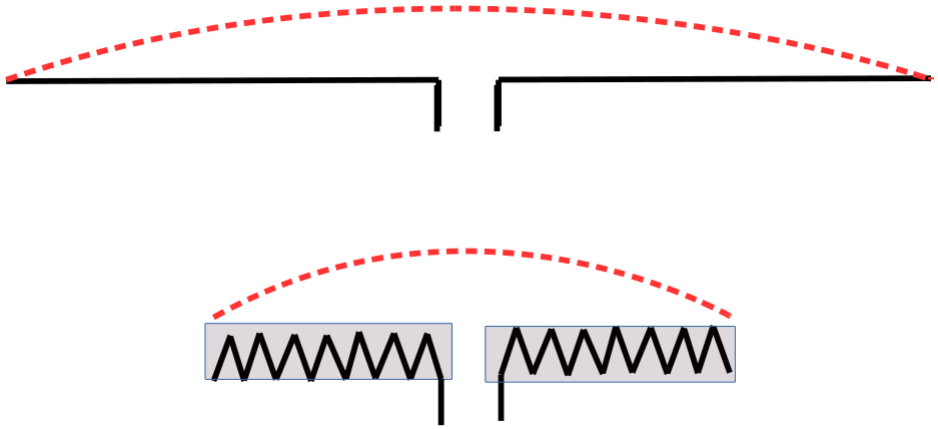

If we imagine each red dash to be a small current element pumping out E&M radiation we see that the SW dipole (below) only has 1/3 as many red dashes as the full half-wave dipole above. The easiest way to see this is to imagine that the SW zig-zag is replaced by the square wave pattern shown below where the vertical segments are 2x as long as the horizontal ones.

Since the individual segments are much smaller than a wavelength, the current in adjacent segments is almost identical. Therefore radiation from adjacent vertical segments will be equal and opposite and sum to zero. Only the horizontal segments will radiate. For every horizontal current segment on the SW dipole there are three equivalent segments on the full length wire dipole. Therefore the wire dipole will radiate an E&M field 3X stronger than the SW dipole, and therefore 9X the power. Since the both antennas are fed with the same current, the SW dipole must have a radiation resistance of 1/9 that of the wire dipole, or about $\frac{72}{9} = 8\,\Omega$. Adding 9:1 balun (3:1 turns ratio) can get you back to $72\,\Omega$ and with a functional half-wave dipole in only 1/3 space. In addition to the smaller size, it will have a smaller bandwidth as well. Bandwidth is just something you have to sacrifice to have a small antenna.

Snaggletooth Wire offers a new way to skin an old cat. Wonder when HRO will be taking orders ...

Solutions to D.C. Circuit Problems

To calculate the resistance between the blue nodes in Problem 1 we push a 2A current through it and calculate the total voltage drop between the blue nodes along any path. The 2A current injected at the top has two identical paths it can take, so the 2A must divide equally between the two paths. Calculating the voltage drop across the red path gives

$$V = 1\cdot 10 + 1\cdot 10 = 20\ .$$

By Ohm's law, the equivalent resistance must give a drop of 20V with a current of 2A, or $R = \frac{V}{I} = \frac{20}{2} = 10\,\Omega$.

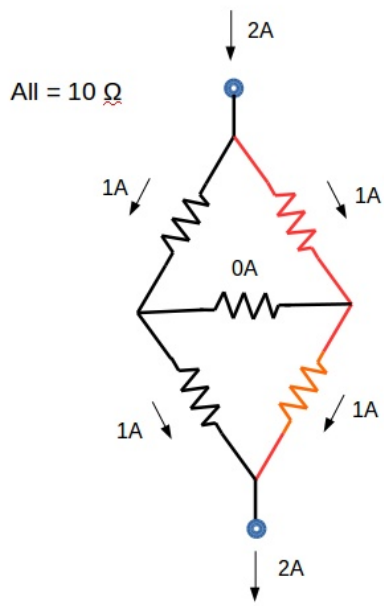

Problem 1

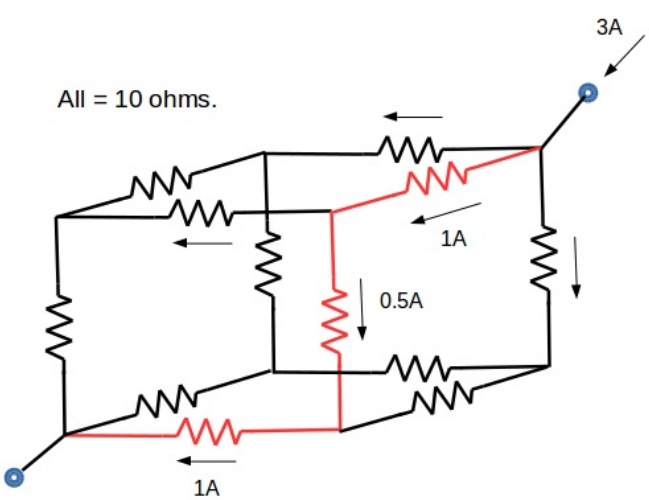

Problem 2

For Problem 2 we inject 3A and calculate the voltage drop along the red path. Due to the symmetry of the network, at every node the input current must divide equally between the outgoing paths. So the total voltage drop is

$$V = 1\cdot 10 + 0.5\cdot 10 + 1\cdot 10 = 25$$

and

$$R = \frac{V}{I} = \frac{25}{3} = 8.33\,\Omega$$

For Problem 3, we have a network made by repeatedly linking an infinite number of sections of three resistors. Let's define R_n as the resistance of n sections. If we add another section to R_n we get

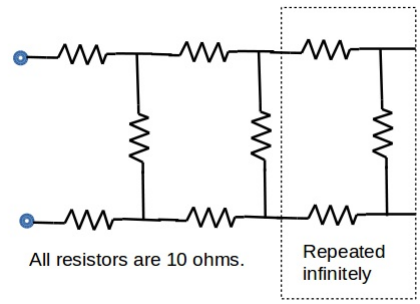

Problem 3

$$R_{n+1} = 20 + \left(10 \| R_n\right)$$

where $\left(10 \| R_n\right)$ is the parallel combination of R_n and a 10 Ohm resistor. Starting with $R_1 = 30$ we can apply the above equation iteratively to get $R_n = \{30, 27.5, 27.33, 27.32, 27.32, \ldots\}$.

Alternatively, we can let $n \rightarrow \infty$ and solve for $R_\infty = 20 + \left(10 \| R_\infty\right)$.

$$R_\infty - 20 = \frac{10 \cdot R_\infty}{R_\infty + 10}$$

$$\left(R_\infty - 20\right)\left(R_\infty + 10\right) = 10 \cdot R_\infty$$

$$R_\infty^2 - 20 R_\infty - 200 = 0$$

$$R_\infty = \frac{20 \pm \sqrt{400 + 4 \cdot 200}}{2} = 10 + 10\sqrt{3} \approx 27.321$$