MOUNTAIN SPARK GAPS

NPARC—The Radio Club for the Watchung Mountain Area

Website: http://www.nparc.org
Club Calls: N2XJ, W2FMI
Facebook: New Providence Amateur Radio Club (NPARC)

February 2013

Regular Meetings

Second & Fourth Mondays
3/13 & 3/27

Digital Net Mondays at 9:00 PM
PSK on 80 or 10 meters
CW training Net, Thursdays at 9:00 PM

Meeting Schedule

Regular Meeting: 7:30—9:00 PM
2nd & 4th Monday
of each month
Watch for Emails

Everyone is Welcome
If a normal meeting night is a holiday, we usually meet the following night.
Call one of the contacts below
or check the web site

Club Officers for 2023

President: K2UI, Jim Stekas
201-406-6914
Vice President:W2EMC Brian DeLuca
973-543-2454
Secretary: K2AL: Al Hanzl
908-872-5021
Treasurer: K2YG Dave Barr
908-277-4283
Activities: KC2MTN, John Zellhofer
973-462-2014

On the Air Activities

Club Operating Frequency
145.750 MHz FM Simplex

Sunday Night Phone Net
Murray Hill Repeater (W2LI) at 9:00 PM
Transmit on 147.855 MHz
With PL tone of 141.3 Hz
Receive on 147.255 MHz
Net Control K2AL

Digital Net
Mondays 9 PM
28,084 — 28,086
Will be using PSK and RTTY
Net control K2YG

Club Internet Address

Website: http://www.nparc.org
Webmaster KC2WUF David Bean
Reflector: nparc@mailman.qth.net
Contact KC2WUF, David

MOUNTAIN SPARK GAPS

Published Monthly by NPARC, Inc.
The Watchung Mountain Area Radio Club
P.O. Box 813
New Providence, NJ 07974

Editor: K2EZR Frank McAneny
Contributing Editors:
WB2QOQ Rick Anderson

Climatological Data for New Providence for January 2023

The following information is provided by Rick, WB2QOQ, who has been recording daily weather events at his station for the past 43 years.

TEMPERATURE -
Maximum temperature this January, 61 deg. F (January 4)
Last January(2022) maximum was 56 deg. F.
Average Maximum temperature this January, 46.8 deg. F
Minimum temperature this January, 24 deg. F (January 16)
Last January(2022) minimum was +5 deg. F.
Average Minimum temperature this January, 34.0 deg. F
Minimum diurnal temperature range, 6 deg.(40-34 deg.)1/11;(40-34)1/19

Maximum diurnal temperature range, 20 deg. (49-29 deg.)1/28

Average temperature this January, 40.4 deg. F
Average temperature last January, 27.1 deg. F

PRECIPITATION -
Total precipitation this January- 5.05" rain/snow melt; 0.5" snow
Total precipitation last January- 3.63" rain/snow melt; 13.45" snow

Maximum one day precip. event this January-

January 25, 1.05" rain, snow melt.
Measurable rain fell on 15 days this January,6 days last January.

YTD Precipitation - 5.05"

==========

Rick Anderson
2/18/2023
243 Mountain Ave.
New Providence, NJ
(908)464-8911
rick243@comcast.net

Lat = 40 degrees, 41.7 minutes North
Long = 74 degrees, 23.4 minutes West
Elevation: 380 ft.
CoCoRaHS Network Station #NJ-UN-10

President's Column

Every year the NPARC auction kicks off the hamfest season. If our auction is the Groundhog Day of hamfests, this should be a very good year.

One gratifying take-away for me is how the NPARC members transform into a well oiled machine around auction time. No one needs to be told what to do, they just see a problem and jump in to solve it. The only "can do better" on the auction report card is in the audio feedback department. As the principal producer of feedback it's on me to come up with a solution.

Another interesting take-away was the longevity and desirability of vintage Tektronix and HP test equipment. Oscilloscopes were everywhere, and they sold very well. I thought I saw a 45 year old Tek 485 that originally cost as much as a Corvette when new, clear the auction block for $35! You would need at least $1000 to get new scope of similar performance. Regardless of the low price the Tek 485 still offers a screaming 350 MHz bandwidth. You could connect a rubber ducky to the input and look at the signal from your VHF handy, and probably your UHF handy as well. But I would not be surprised if 20 years from now the bargain scope from Amazon was in a landfill while the Tex 485 was still doing it's job on the bench.

73,
Jim - K2UI

Oscilloscope Probe Circuit

Jim Stekas - K2UI

After watching the parade of vintage Tektronix oscilloscopes at the NPARC auction it seemed a good time to discuss some of the cleverness behind high frequency oscilloscope probes.

If you picked up a vintage Tek scope without any probes you might think that you could get by with a needle probe from a DVM soldered to the end of 3.5 ft of RG58 coax. The result would be roughly equivalent to the circuit below and it is sure to disappoint.[1]

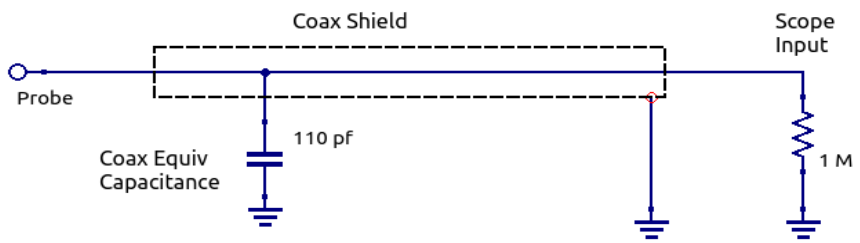

Naive Probe Circuit

The capacitance of the coax will be roughly 110 pf and will shunt the $1M\Omega$ input impedance of the scope. The result will act as a low pass filter. The RC time constant of this circuit is about 0.1 msec, which means for frequencies above 10 kHz the capacitive reactance of the coax will be less than the input impedance of the scope. For signals of 1 MHz, the effective impedance of the probe is less than $2k\Omega$ and the circuit under test will be heavily loaded.

High bandwidth probes are typically x10 probes, meaning that the actual signal level the scope displays is the signal at the probe x10. The figure below shows the circuit of a x10 probe.

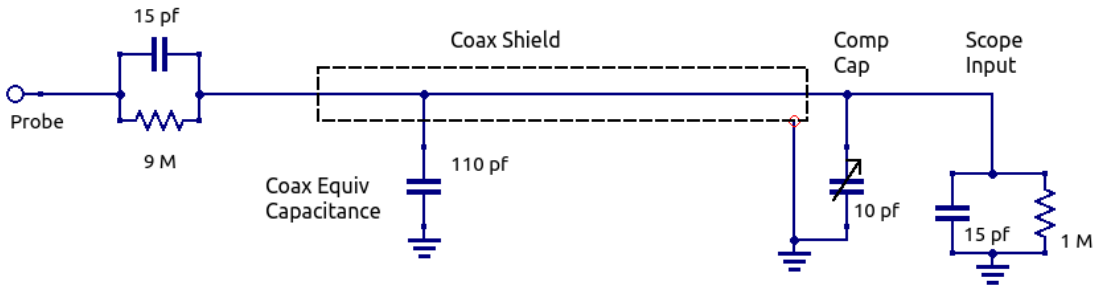

x10 Probe Circuit

At low frequencies we can ignore the capacitors and see that the circuit divides the probe input voltage by 10, so a x10 probe is more properly a divide-by-10 probe. Dividing a voltage by 10

1 Been there, done that.

represents a 20 dB loss, and there better be a good reason for giving up that much signal. The probe essentially trades signal level for a high frequency bandwidth.

The equivalent circuit of the x10 probe (figure below) shows that the voltage divider is composed of two shunt RC circuits. Both of these RC circuits have the same time constant of $135\mu sec$, and hence the same phase. Therefore their impedance ratio is 9:1 regardless of frequency.

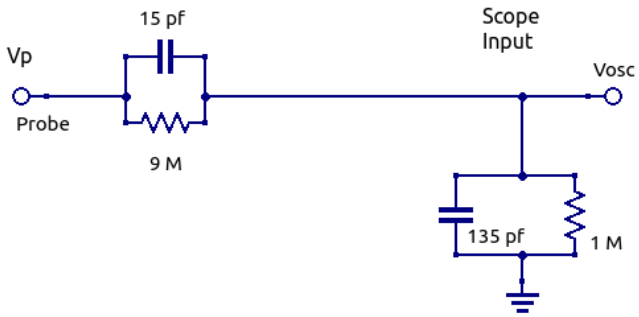

x10 Probe Equivalent Circuit

To get the RC ratios to be the same, the end of the probe that connects to the oscilloscope contains a small variable compensating capacitor which is typically adjusted to create the cleanest possible display of a square wave input.

The magic does not end with the compensated voltage divider circuit. The coax used in the probe uses a nickel-chromium wire with a resistance of about $100\Omega/ft$ to suppress reflected waves from "ringing" in the coax. Because nickel-chromium is much stronger than copper it can be very thin to minimize the capacitance in the coax.

You can buy a 200 MHz oscilloscope with two probes (included) from Amazon for about $350, which is slightly less than the price of a single Tektronix 250 MHz probe (right). The probes that come with a vintage Tek scope might well be more valuable than the scope itself.

Tektronix

Tektronix TPP0250 Passive Voltage Probe, 10X, 250 MHz, TPP Series

Manufacturer Part Number: TPP0250
TestEquity Part Number: 22501.1
Shipping Weight (Lbs): 2.000
Condition: New
Manufacturer: Tektronix

References

1. *Oscilloscope Probe Circuits*, Joe Weber, Nov 1969, Tektronix